Agronic-
Slurry Tankers

AGRONIC Slurry Tankers with a Low Center of Gravity & Unprecedented Power.

AGRONIC slurry tankers are designed and manufactured for demanding use. The chassis is constructed from S355MC steel.

The wall thicknesses of the tank are, depending on the placement within the body, are 4-6 mm. The structure has been made to be very durable yet lightweight.

A wide range, tailored to the individual requirements of each customer.

Three basic models of :

XS: 10 and 12 m^3 single axle

S series: 14, 17 and 20 m^3 with steerable and suspended bogies.

HS and HXA 14, 17, 20, 25 and 30m^3
Hydraulic suspension, with tandem and tridem axles.

AGRONIC slurry tankers feature a low center of gravity.

The lower position of the tank body, significantly lowers the center of gravity. You can dive with a full tanker, without worry, on slopes and or uneven fields. However, the ground clearance remains sufficient.
Depending on the size, there are 2 or 3 internal anti-slosh baffles.

The tank body is epoxy coated on the inside, the outside surfaces are sandblasted, and coated with polyurethane paint. A coat of lacquer over the paint ensures durability and makes for easier cleaning.

The Nokian ELS radial tires feature a 15% lower rolling resistance and a 20% lower surface pressure than other comparable belted tires.

Belt pressure is kept low at field speeds, allowing for the tread pattern to clean itself while turning.

The S, HS, and HXA series are equipped with a powerful PTO-driven, 5-blade impeller, on a chromed shaft, with double-row roller bearings. The impeller is balanced and greaseable, and the bearings feature triple seals.
The **chrome plating** on the shaft improves resistance against corrosion and wear.

Agronic slurry tankers bring a new dimension of thinking to slurry handling:
- A low center of gravity
- Excellent handling characteristics on the road and in the field
- The tank empties from the front bottom last, ensuring optimum weight balance is maintained.
- Self-supporting structure, no separate heavy frame, resulting in an overall lower dead weight
- Hydraulic hoses and cables are cleanly routed.
- The tank interior is epoxy coated. While the outside surfaces are sandblasted, painted, and the lacquered.
- Comprehensive selection of accessories
- High-quality, correctly sized axles and suspension systems according to your needs.

AGRONIC XS Single-Axle Slurry Tankers

AGRONIC XS series slurry tankers and are light and agile models equipped with large diameter tires.

Can be equipped with different types of spreading ramps.

- Hydraulically-driven drain pump. No PTO drive required.
- Hydraulic slide valve is standard.
- Ramp mounting points are standard.
- Fenders are standard.
- LED lights are standard.
- Two capacities: 10 m³ and 12 m³.

Excellent handling.

- Low center of gravity, with the tank body mounted directly on the axle.
- Oval form tank body that has become Agronic's trademark.
- Lower tank that keeps sufficient weight distribution until empty.
- Twin anti-slosh baffles in both directions.
- High-quality belted tires.

1050/50R32 belted radials, lights, and fenders as standard

AGRONIC S-series: With Pendular Bogie

The **AGRONIC S -series,** with it's pendular bogie, has formed the basis of every slurry tanker we have manufactured since 2001. Over the years the tanker's structure, feature, and usability have been refined into a seamless unit.

The slurry tanker can be delivered with equipment desired or retrofitted later on. **The attachment points for the spreading ramps are integrated and are standard equipment.**

Fully equipped as standard, for example: steerable suspended axles, monitoring for undercarriage locking pressure, with a switch and indicator light, hydraulic brakes, LED lights, fenders, filling funnel, wide angle PTO shaft with shearbolt, ball coupling ready, man hatch, fill indicator, and a ladder.

The **AGRONIC S-series** are equipped as standard with friction-contolled axles sourced from ADR, with parabollic spring suspension. Hydraulic brakes are also standard.
The load carrying capacity of 24 metric tons (52,910 lbs) is always present.

As optional equipment, for example: pneumatic brakes, crab steering, or forced steering.

Nokian ELS SB radial tires as standard.

Hydraulically Suspended 3rd Axle

The 17 and 20 m³ **AGRONIC-** S-series can be equipped with a seperate third lifting axle. The third axle combines the bogie's full range of motion, and the stability of the hydraulic suspension. Approx. 5,000 kg (12,125 lbs) of weight can be carried by the third axle. It correspondingly reduces the axles weights, so (for example) a 20m³ (5,283 US gal.) is kept below 10,000 kg (22,046 lbs) per axle.

Even a large slurry tanker can de driven fully loaded on a public road.
The front axle is hydraulically suspended, braked, fully steerable and the pressure can be infinitely adjusted.

The bogie axle of the slurry tanker is located further to the rear than normal, when the front axle is lifted during transport with an empty tank, the weight is shifted to the tractor drawbar. During field operation with a full load, the axle is lowered and weight to driving wheels is increased. Handling, off-road performance, and fuel economy are all improved.

AGRONIC HS-series: For Field & Transport

Agronic HS-series: Hydraulically suspended, friction-controlled, tandem and tridem axle slurry tankers with a low center of gravity.
The structure, piping, agility, and power remain the same as found in the HXA II series. The only difference being a more basic standard equipment specification and lower overall price.
The hydraulic suspension balances the weight on each wheel, so offroad performance and handling are improved, along with increased stability when compared the mechanical chassis.
With capability to hydraulically lift the front axle, the weight can be transferred from the slurry tanker to the tractor drawbar in an instant. When empty and on the road, the front axle remains lifted, providing increased drawbar weight and improved handling.

Agronic HS-series: As featured in the photo, an HS tanker configured for transport and equipped with road tires. Owing to the tanker's low center of gravity, proper weight distribution, and hydraulic suspension, transport driving is fast and smooth. With tridem axle models, the front lift axle is standard.

AGRONIC HXA II system: Slurry Tankers with Crab Steering & Hydraulic Suspension

Agronic HXA II system is the standard to which all slurry tankers are measured!! The most advanced hydraulic and electronic controls available on the market!

The 7" colour touch-screen display also features physical buttons.

The main control is a single joystick lever.

The colour- coded joysticks directly control certain buttons on the screen. There is no need to change the grip and the work is smooth.

Two cameras, on the back and on the loading arm, with an automatic change of the viewing angle depending on the function mode in use.

Very accurate speed and reversing information is obtained from the tractor's path, this way the tanker accurately calculates the speed and direction.

Softly proportional and without gestures, the analog joystick provides precise control of movements for the pumping arm.
The function specific LS-hydraulics do not cause pressure shocks, do not unecessarily overheat the oil, which in turn elminates power losses.

When shifting, the automatic system always focuses in the center. During road transport, swaying of the tractor does not affect the position of the tanker. The combination remains safe and stable.

Patented electronic forced steering control is standard. There are no push rods or cables on the sides of the drawbar. The tractor can turn freely. The lever of the sensor is connected to where the toplink is normally installed on the tractor.

Thanks to load-sensing proportional hydraulics, movements are smooth and precise.

Very Efficient, Accurate, and Easy-to-Use.

The tanker features draining and mixing pipes with a diameter of 168mm (6 ½") Emptying speed is up to 50% greater than normal.
The standard automatic control system controls the position of the slurry tanker's drain valve based on an accurate flow rate, obtained by a flow sensor, in relation to the actual driving speed.

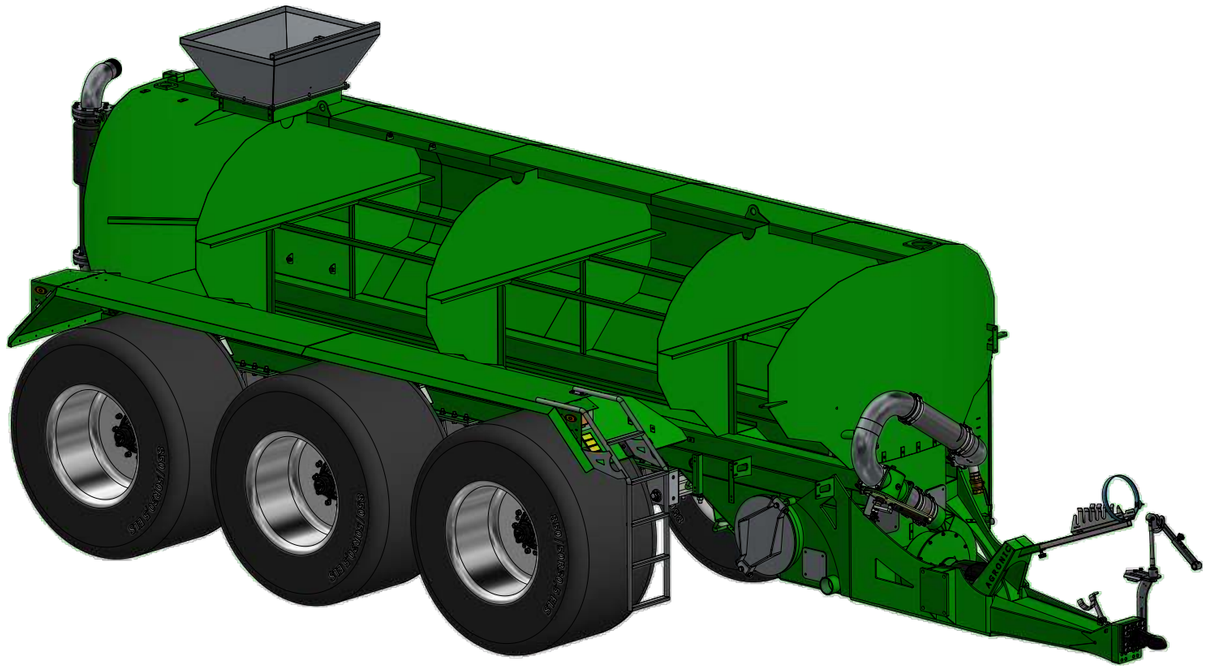

Solid anti-slosh baffles all the way up to the ceiling.

A stable ride, free of jolts at all speeds, thanks to the lowered tank front. No need to compartmentalize during unloading, as the slurry tanker always empties completely from the front frist and the pump works at high power until the end of the load.

AGRONIC HXA II AIR System: Central Tire Pressure Control & Savings with Every Working Hour.

The AIR system is fully integrated into the tanker's control system. Compressor is located in the hydraulic cabin.

Agronic air system allows for the tanker's tire air pressure to be adjusted directly from the operating system. Both pre-set and quick-set are available for selection by the operator.

The time required to fill all 6 tires with 0.8 - 2.0 Bar (12-29 PSI) is approx. 3 minutes, emptying is faster. There is no need to wait in place for the tires to fill, because the weight of the empty wagon is less and thus the pressure required for road travel is lower.

The system is ready to connect to the tractor's control system, The pressure adjustment of the tractor's tires takes place either at the same time or before those of the slurry tanker.

As shown in the photo, tires at 0.8 bar (12 PSI).

These calculations are based on the measurements of an HXA II 20m³, loaded, with an approx. weight of 31,000 kg (68,343 lbs).

3 bar (43½ PSI), wheel surface contact of Width of 705mm (27¾"), tread pattern length of 390mm (15").

6 wheel surface contact area of 1.65m²

0.8 bar (11.6 PSI) wheel surface contact of
Width of 750mm (29½"), and a tread pattern length of 700mm (27½").

6 wheel surface contact area of 3.15m² (34 ft²) .

With field operating pressure, the surface area is doubled!

The advantages of of using 0.8 bar (11.6 PSI) in the field, as compared to 3.0 bar (43½ PSI) road pressure are: The surface area of the tires is doubled, the surface pressure is halved, reduced soil compaction, increased CROP YIELD. **Advantages of 2.5 bar (36 PSI), compared to the comprimise pressure of 1.8 bar (19 PSI) are:** Lower rolling resistance, lower traction requirement, increased fuel economy, decreased demand on the tractor's transmission. Improved handling, improved safety, and improved overall management.
With the right road pressure, tire wear is signifcantly reduced, leading to longer tire life, leading to increased savings!

AGRONIC T- series: Tanks for Body Swap Systems. Complete with Hydraulic Controls.

We manufacture and customize Agronic T-series tank bodies for use on various types of trucks and trailer systems.
We also supply pump loading arms, hydraulics, and electric control systems.

We also manufacture and customize Agronic T-series tank bodies for tractor-pulled trailer platforms. The drain pump can be hydraulically driven. A pump loading arm can also be installed, with the load being transferred via the foam hose. As shown, this tank body and trailed combo has a double spreading plate installed, so it can also be used to spread slurry.

The tank bodies manufactured by Agronic are designed to be as low as possible, therefore the center of gravity is also kept low.

AGRONIC Crab Steering

With crab steering engaged, the **AGRONIC** tanker can be guided to follow in a different track then that of the tractor. The risk of soil compaction and becoming stuck are greatly reduced. Crab steering is connected to the slurry tanker's headland management system, so changing between crab and forced steering is automatic (for example).
With crab steering engaged, the slurry tanker is offset sideways from the center line of the tractor, allowing for the driving line to kept further away from the ditch or field boudries, and damage to the field surface can be prevented.

The surface area over which the weight is distrubted is doubled.

The unique frame design of the AGRONIC spreading ramps allows the for the ramp to be pulled obliquely in relation to the tanker. In this manner, the spreading ramp remains in the correct position relative to the soil.

The Photos Speak for Themselves:
On the left, on light and loamy soil with crab steering disengaged
On the right, the same soil with crab steering engaged.

Center-Mounted Pumping Arms

The **AGRONIC center-mounted pump loading arm** can be steered to either side of the slurry tanker.

A crown gear, as used in log loading cranes, is used as the steering device in the pump loading arm.

A third arm joint, and load transfer equipment are available as optional equipment.

Shredding piston pump. The PTO shaft does not need to be engaged, fuel consumption is reduced, and filling capacity is greater than
10,000 liters (2641 US gal)/min.

The pumping power remains high, even when pumping thick slurry from a depth.

Technical Specifications

Piston motor	Two models, Aber MBI, oil requirement 110 or 130 l/min.
Hose size	2x 125 mm
Power	Max. 8.000 or10.000 l/min.
Reach	Over a with a max. height of 1.5-m, and up to a maximum depth of 4.0-m.

Hydraulic Requirements 3-4 double acting spools, with constant supply line, and free-flow return.

Accessories: Third joint, transfer pumping equipment

Optimum Dimensions

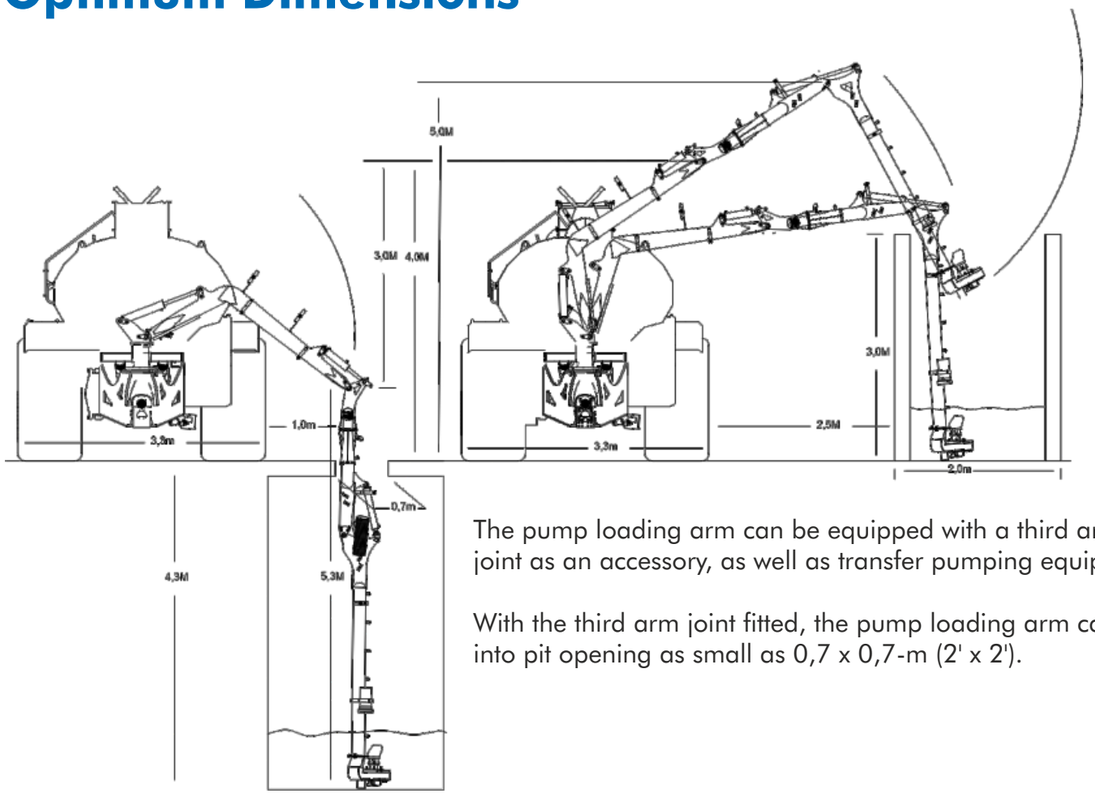

The pump loading arm can be equipped with a third arm joint as an accessory, as well as transfer pumping equipment.

With the third arm joint fitted, the pump loading arm can fit into pit opening as small as 0,7 x 0,7-m (2' x 2').

Side-Mounted Pumping Arms

The **AGRONIC** side-mounted pumping arm is an efficient way to load and keep the slurry tanker clean. Filling takes place via the hydraulic shredding through a 168-mm (6″) tube.
The filling hose has a non-return valve at the bottom of the tanker to reduce foaming.

The side-loading arm reaches into the slurry pit with a single movement. A telescopic boom extension and transfer pumping equipment are available as optional accessories.

With the telescopic extension, the pumping depth can be increased by up to 5.1-m (16') .

Side-mounted pumping arms can be fitted to other brands of slurry tankers.

Piston motor pump.

Technical Specifications

Standard Pump Motor:	Danfoss OMR 50, oil requirement 50l/min.
Piston Motor Pump:	Two models, Oil requirement 110 or 130l/min.
Hose dimensions:	1x 168-mm.
Capacity Max. l/min:	5500, 8000, or10.000
Range:	Standard model has a reach of up to 3,4-m below ground.
Hydraulic Requirements:	2–3 double acting spools, with constant supply line, and free-flow return.
Optional Equipment:	Transfer pumping equipment, telescopic arm extension for depths up to 5.1-m

Equipped with a 5.1-m (16') Extension:

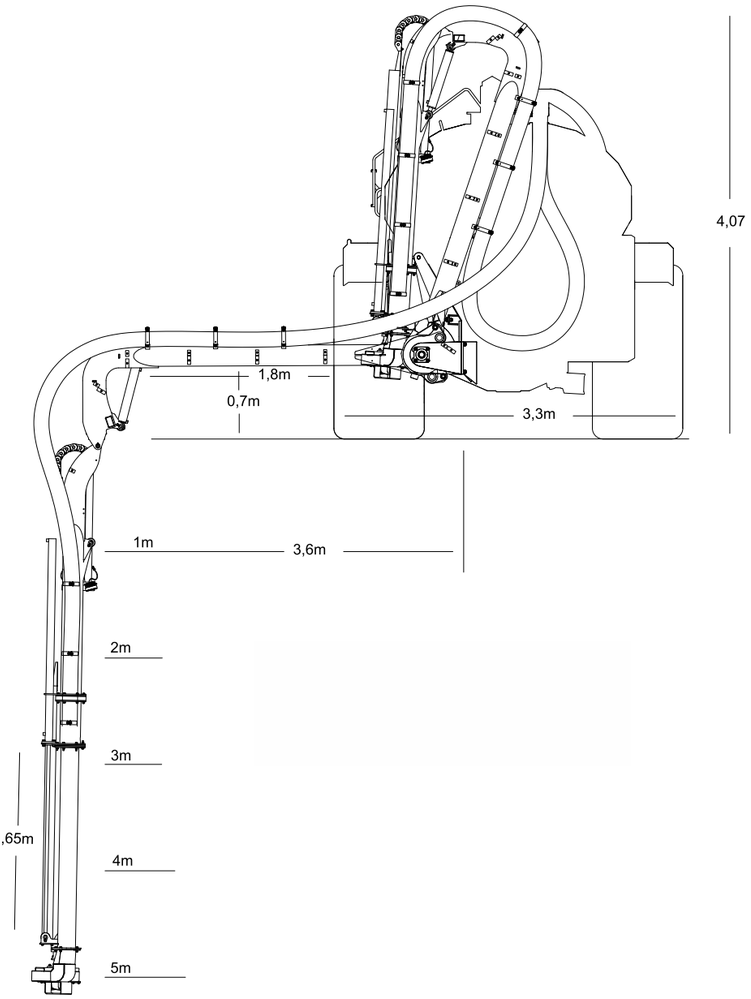

AGRONIC TSR-series Trailing Shoe Ramps

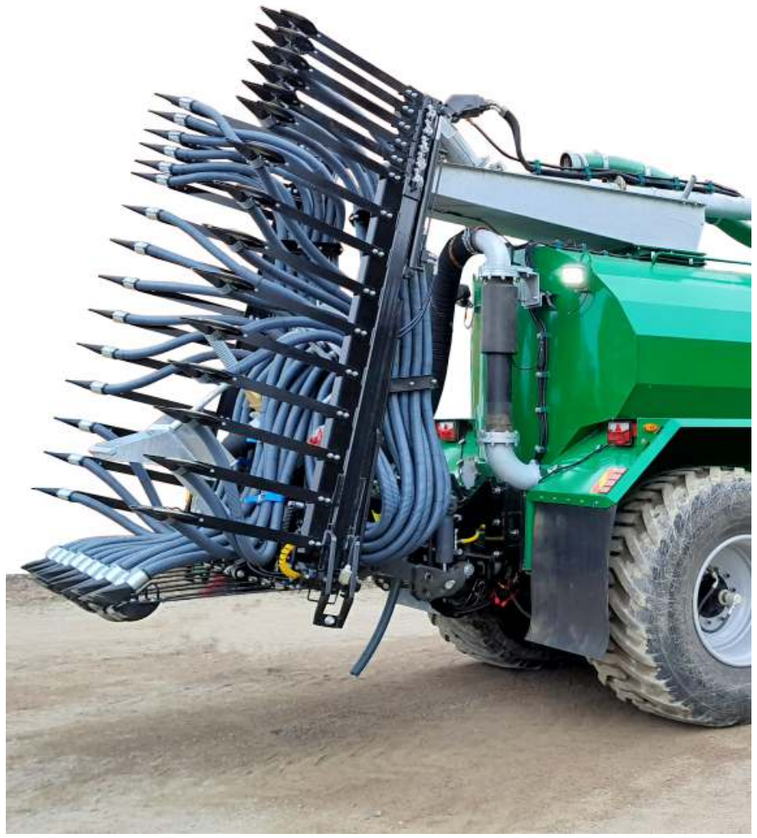

AGRONIC -TSR 9000 trailing shoe spreading ramps allow for the slurry to be directly applied to the plant's roots during the growing season, with low nutrient losses and reduced odors

.Spring loaded knives with a spacing of 23cm (9") cut grooves 5-40mm (0.9 to 1½") deep, into which the slurry is precisely dosed by the distributor.

The trailing shoe works great also on light soils and grain/soy stubble.

Thanks to the ramp's articulated frame, working in curves is also possible.

A unique swiveling attachment, the spreading ramp can steer with the tanker.

Can be operated with the crab steering system engaged, and in curves.

Spreading with crab steering enagaged significantly reduces soil compaction and improves yield.

When working on odd shaped fields, the work efficiency increases, as you do not have to look for straight driving lines, instead you can have the spreading ramp engaged more often. Improved surface following and a reduced footprint.

The spreading ramp follows the ground independent of the slurry tanker, with coulters also having better ground following and the working footprint remains good.

AGRONIC HXA II with In-Control:

Also, with Two Vertical Dividers

The TSR12000 is available with two eccentric-type distributors from Harsø of Denmark. The enables halving of the working width, shorter supply hoses, and a tighter row spacing.

HD vanes are standard. They have a long service life, and have affordable replacement costs.

The standard distributor used on the TSR series is now even more efficient and easier to maintain. This **AGRONIC** distributor has two-phase shredding, is highly permeable, and precise. The frame and dividing beam are amde from hot dip galvanized steel, cutting surfaces are machined, and the wearing parts as well as the screws are made from stainless steel.

Open 4-prong, distribution beam even provides for accurate distribution of foamy slurry at high speeds.

30% better throughput: The 150-mm (6") feed hoses, a larger shredder, and a 3-prong blade in practice deliver more than 7m³ (247 ft³)/min. The powerful OT-315 features a 40-mm (1½") shaft for distributor head drive.

Easy and safe maintenance work, thanks to a hinged cover and anti-slip surfaces

Technical Specifications

Model	TSR 9000	TSR 12000	TSR 12000H
Working Width	9 m	12 m	12 m
Folding Position of Wings	Telescopic	Folding	Folding
Divider	4 section		2 pc Harsø
No. of Hoses	40		54
Application rate		5-80 t/ha.	
Spacing	23 cm	30 cm	23 cm
Surface pressure		15 kg/shoe	
HD Elements with replaceable wear blade		Standard	
Spreading Plate		Optional	
Hydraulically operated Stone trap		Standard	

Automatic working depth control Agronic HXA In-Control: With programmable weight reduction, surface pressure ctrl.,and flotation

AGRONIC JVM- series Trailing Shoe Ramps

The transport position is compact, wing folding is automate

AGRONIC -trailing shoe ramps allow the slurry to be applied to where it provides the greatest benefit: directly to plant roots, durting growing season. With reduced nutrient loss and reduced odours.

The spring loaded coulters make incisions approx. 5-40mm (0.19-1½") deep every 30 cm (12"), into which the slurry is precisely dosed.

A trailing shoe also works well on lighter soils and on grain/soy stubble.

Thanks to the articulated frame, operation in curves is also possible.

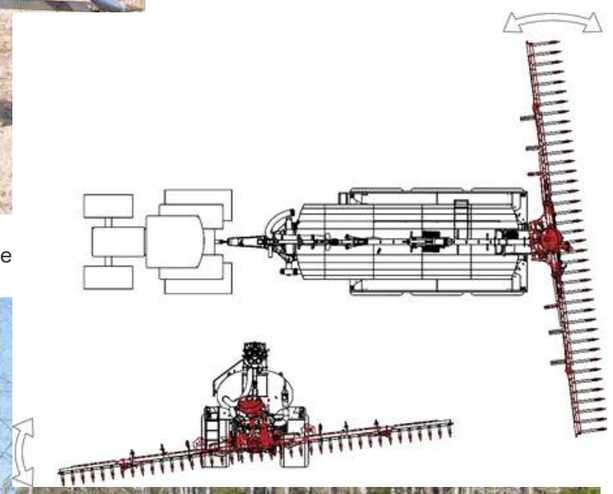

The frame of the spreading ramp can turn and tilt independent of the slurry tank.

Turning and tilting are dampened with shock absorber ground counter following remains constant, and the work remains visible.

Also on convex fields with open ditches.
Sludge is dosed into the incision cut by the couilters by 12-mm (½") nozzles.

Technical Specifications

Model	JVM Trailing Shoe Ramp	
Working Width	12m	15m
Divider	4 sections	
No. of Hoses	40	54
Oil Requirement	30l/min	
Application rate	5-80 t/ha.	
Spacing	30 cm.	
Surface pressure	15 kg/shoe	
Spreading plate	Option	
Hydraulically operated Stone trap	Standard	

Automatic working depth control Agronic HXA In-Control: Programmable operating pressure management. With programmable weight reduction, surface pressure ctrl., and flotation.

AGRONIC AG 6000 & AG 8000 Disc Injector Spreading Ramps

AGRONIC- The disc spreading ramp follows the surface precisely, as the body is articulated in the the middle.
The wings follow the ground contours, and the coulters have a 50cm (19") travel height for obstacle clearance.
The open design and reasonable traction requirement allow for operation on ploughed ground.

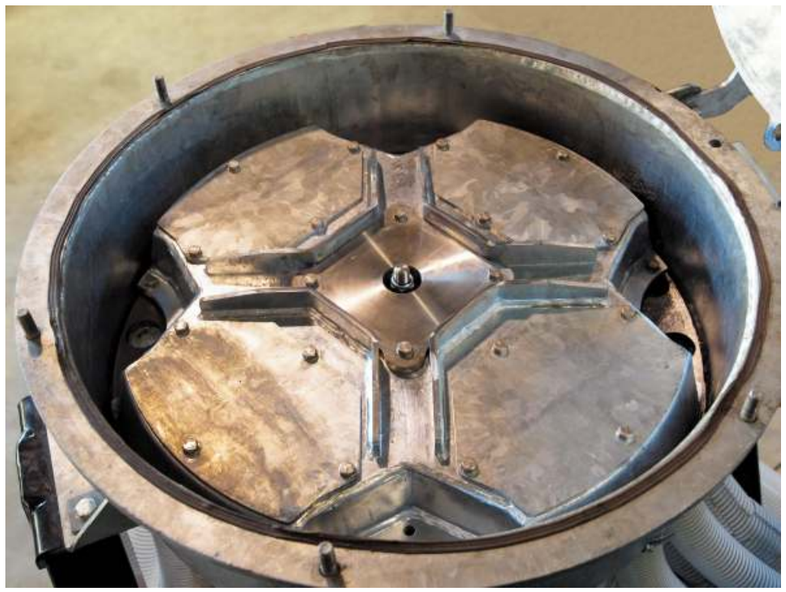

The blades are manufactured from wear resistant plate.
The divider can be rotated in either direction, Emptying the stone trap is easy, using the hydraulic valve.

Shredding happens in 2-stages.
The slurry is pumped through the distributor at the top of the stone trap. In addition, it is also shredded at the ends of the distribution beam. As shown in the photo, the distributor for the AG and JVM series. TSR is similar.

AGRONIC disc ramps allow for applying slurry during growing season.
Nutrient loses remain low and odours are also reduced.
The 40 spring loaded discs cut incisions into the ground at a desired depth ranging from 0-60mm (2") deep into which the slurry is precisely dosed into the cut grooves by nozzles.
The cut furrow is not unnecessarily deep or unnecessarily wide. Traction requirement remains reasonable.

One disc/one nozzle also works on stubble over long distances.

Slurry is pumped from the distributor through optimally sized 50-mm (2") hoses. The flow rate remains sufficiently high, no accumlation in the hoses, and tehre no joints or choke points.
Delivering to 12-mm (½") wide nozzles.
Owing to their attachement and design, the nozzles remain practically unclogged.

The ramp can turn and tilt independently of the tanker. Turning and tilting are dampened by shock absorbers

The wings and central body are equipped with pressure accumulators, the ramp's three sections follow the contours of the terrain.

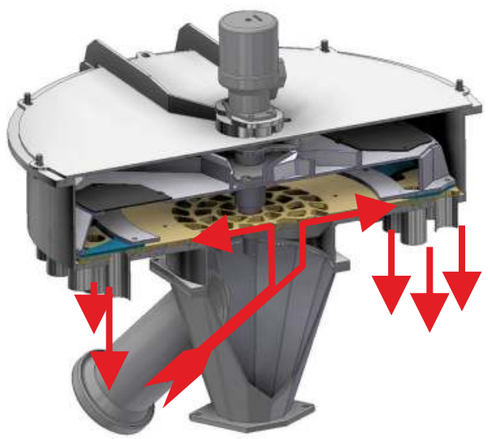

The discs have a diamete of 300mm (12') and made from tough boron steel.
The bearings are of the tapered roller type.
The thickness of the discs is 4mm (0.15", with a cutting angle of 1.5° and the furrow is 11-mm (.43") wide.

As an optional accessory, spacers can be added to increase the furrow with to 18mm (.70"). Two spacers can be added per disc.

Technical Specifications

Divider	4- section
Hose diameter	40 or *32 hoses w/50-mm dia.
Oil requirement	30 l/min,
Application rate	5-80 t/ha
Working width	AG8000 8 m. and*AG6000 6,4m.
Spacing	20 cm.
Soil pressure Max.	245 kg/disc
Net weight	1850 kg or*1450 kg

Overload protection pressure accumulators and safety valve* (theinformation applies to a 6.4 m ramp).
Agronic HXA In-Control: Programmable operating pressure management: Driver can select constant surface pressure, penetrating pressure, or float mode. Automatic working depth control and 3pt linkage for attachment to other brands of slurry tanker, are available as optional accessories.

AGRONIC Slurry Tankers: Capable of Integrating Many Brands of Spreading Ramps

When you chosen a modern, reliable, and efficient AGRONIC slurry tanker, but can not find a spreading ramp from our offering that suits your requirements, there's no need to compromise. We can integrate spreading ramps from competing manufacturers.

We are not selfish, and can offer spreading ramps from leading manufacturers such as Vogelsang and Bomech.

AGRONIC can sell and install the spreading ramp, at a competitive price, with guaranteed workmanship.
These ramps are designed for demanding, Western European and North American conditions, and re both reliable, as well as being efficient. There are different versions available within the extensive product ranges.
Crab steering Imposes Restrictions

Within the Nordic regions, slurry tankers equipped with crab steering are popular amongst contractors, owing to their reduced impact when it comes to soil compaction. This technology is not always common in continental Europe or North America, where mechanical decompaction is common, therefore not all models of ramps can be used with crab steering.
If the spreading ramp is not equipped with an articulated frame, operation with the crab steering engaged is not possible. As the knife coulter would travel at a bad angle, destroying the field surface.

The photo shows a Bomech Farmer 15 installed on an AGRONIC S-20 slurry tanker.

Characteristics
Working width: 15 m. (49 ft)
Inter-Coulter spacing: 27cm (10½ ft)
Two dividers

Technical data for each spreading ramp is available on the manufacturer's website.

Photo depicts a ramp connected to an S-17 slurry tank with proper adapter plates.

It is possible to connect the ramp's functions with the tractor/slurry tank's headland automation. The functions can be tailored to suit the ramp.

Operational Control with a Joystick

AGRONIC uses PRODEVICE Oy control systems and software developed and manufactured in Finland. Thanks to close cooperation between the two companies, the development of software and functions for customers is smooth.

Thanks to the use of CAN channeling, the tanker's cabling is very simple. The control system is also expendable.

The Electric Valve system only requires a pressure connection and free flow return from the tractor. The operation for the filling pump is connected to the system.

Management takes place via the joystick controller. Control of the pump loading arm and the spreader is easy and logical. The functions that can be locked in include control of the distributor and the slurry tanker, are via the lever switches.

The Joystick controller can be supplemented with:
The onboard omputer makes it easier to monitor the qty. spread, working area, and working time.
Automatic qty. Control is also standard.
The onboard computer also includes headland automation, which makes operation easier. By pressing the button, the distributor lowers, the distributor starts, and the amount adjustment engages. With a second push of the button, the spreading ramp lifts up.
Automatic bogie locking and distributor rotation monitoring are standard.

On-board computer with clear ENGLISH test. Joystick shown in the photo on the right.
.

Agronic In-Control
The new HXA II control system is implemented by a joystick and touch-screen.

The touchscreen and joystick work together, for example, the buttons are colour-coded to correspond to the colours indicated on the screen, so the functions can be used smoothly with both.
The camera screen changes correspondingly to the mode selected.

See HXA II for more information.

Agronic U-Control with a 3.5″ display handles the locking routines, loads, qty. spread, and surface area covered are stored in labled memory locations.

Optional Accessories

Ball and Ball Coupling. Owing the large amount of weight being towed, the life of the twoing eye can be short. A larger towing surface and greasable ball coupling is available, with close tolerances (no play).

Spreading plates, to also work in combination with a spreading are available, selected from in the cabin.

Automatic working depth control of the disc injector ramp is standard on the HXA II series.

Transverse mixing auger for pig slurry, the auger moves and stirs the sludge towards the pump inlet. The recirculation mixture and the screw together ensure effortless spreading with slurry containing a lot of suspended material.

Bauer-type quick connectors, located at the bottom. The foam pipe is at the highest point in the slurry tanker, and is equipped with a non-return valve, ensuring that the tank will not siphon empty.

Central lubrication or centralized lubrication. Minimizes the time spent on maintenance, electronic central lubrication saves working time and ensures the maximum service life of joints and bearings. Available in two versions: with an electric pump, and as a centralized lubrication used with a manual grease pistol.

Hydraulic screw compressor and tire pressure control system, ready for tractor tire pressure control.

The spreading plate always spreads the slurry at the rear of the slurry tanker. The spreading width depends on the PTO speed, and the position of the drain valve, normally this between 10 to 25m. The rate and speed can be increased by using a double spreading plate (not available on XS models)

Technical Specifications

Optional Accessories:
Take Note! Check the requirements and suitability for optional equipment with Agronic!!

Among the comprehensive list of optional equipment you will find: Mixing/cirulation auger, quick couplings for lower filling and foam pipe, hydraulic or mechanical top filling hatch, trailing shoe injectors, dribble bar spreading ramps, disc injector ramps (w/opt. addional discs), hyd. stone trap, 3-way valve at the rear of tank, spreading plate that can be selected from the cabin, double spreading plate, center- or side-mounted pumping arms, 3rd link, transfer equipment for pumping arms, steering with a control lever, trip computer, automatic volume control, automatic working depth control for the injector ramps, forced steering, weight transfer system, ball coupling, crab steering, splash guards, 4-wheel brakes, hydraulic 3rd axle, LS hydraulics, piston filling pump, tire options, central tire inflation, central lubrication, etc.

Volume m³ (US gal.)	10Xs	12Xs	14	17	17	20	20	25	30
Axles	1	1	2	2	3	2	3	3	3
Height to the top of the tank cm (ft.in.)	269	269	280	287	270	295	295	316	317
Length cm (ft. in.)	662	697	808	870	949	938	938	938	1064
Width cm (ft. in.)	299	299	316	328	316	328	328	328	328
Starting Tire Size	1050/ 50R32	1050/ 50R32	750/ 55R 26,5	850/ 50R 30,5	750/ 50R 26,5	850/ 50R 30,5	850/ 50R 30,5	850/ 50R 30,5	850/ 50R 30,5

AGRONIC®
Made in Finland

For more Info:
export@agronic.fi
Tel. +358 44 4017 894

www.agronic.fi

TEHTY SUOMESSA
MADE IN FINLAND

30 Years of Quality for green fields all over the world!